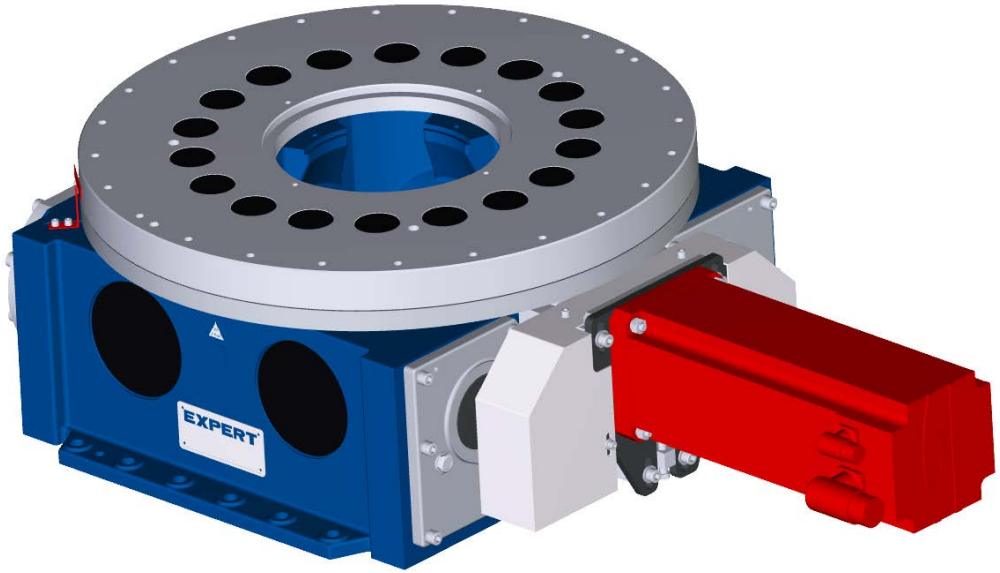

EXPERT-TÜNKERS

EDC series – the turntable with double performance

EDC series with new drive concept

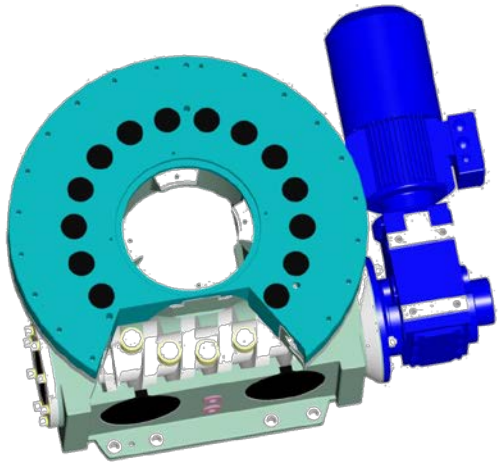

Conventional design, here EXPERT EDH series

- Dial is driven by a step roller on one side
- Motor with transmission gear unit flanged on externally

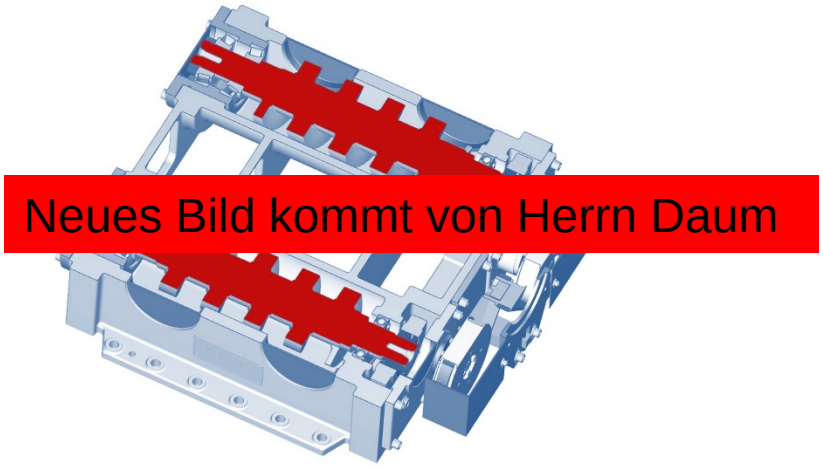

EDC series

- Rotary table with two synchronized step rollers
- Reduction gear unit integrated in the case
- Motor flanged on externally

Performance in comparison

EXPERT
Takten und Positionieren

EDC – EXPERT Double Cam

- Flexible double roller rotary table with maximum torque and extremely compact design
- Sizes:

	Comparison EDH series & EDC series		
Size EDC	Torque EDC	Size EDH	Torque EDH
EDC 810	8000 Nm	EDH 700	2000 Nm
		EDH 810	4000 Nm
EDC 960	16000 Nm	EDH 960	8000 Nm
		EDH 1170	15000 Nm
EDC 1170	30000 Nm	EDH 1370	25000 Nm
		EDH 1600	40000 Nm

Double performance with the same dimensions

EXPERT®
Takten und Positionieren

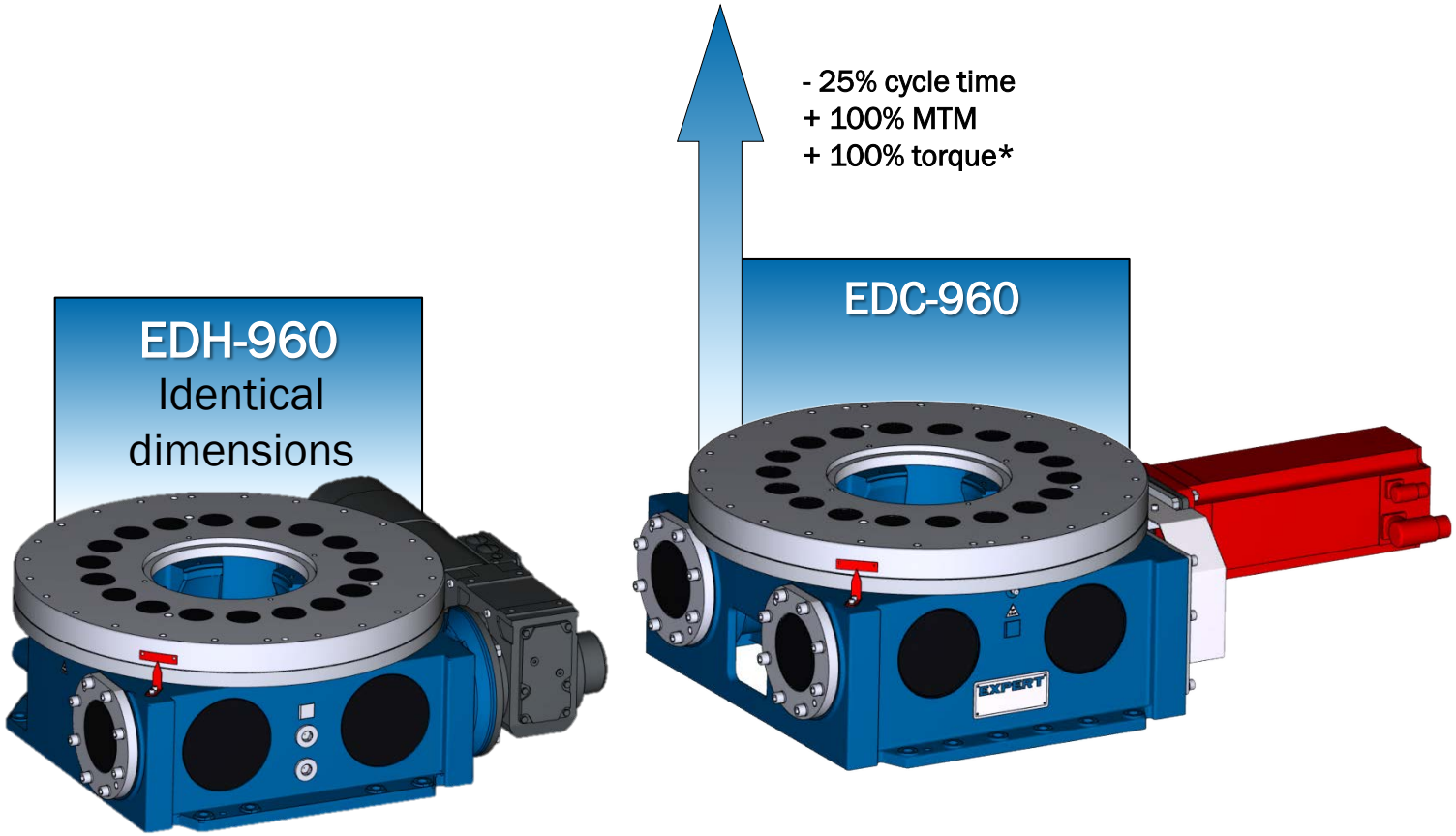

* Reduced cycle time in seconds
Double mass inertia moment (MTM) in kgm³
Double torque in Nm

Variable positioning of the drive

- Due to the reduction gear unit integrated in the table, the drive motor may be arranged externally by means of a simple coupling
- Advantage: easy maintenance thanks to shorter dismantling time and faster exchange

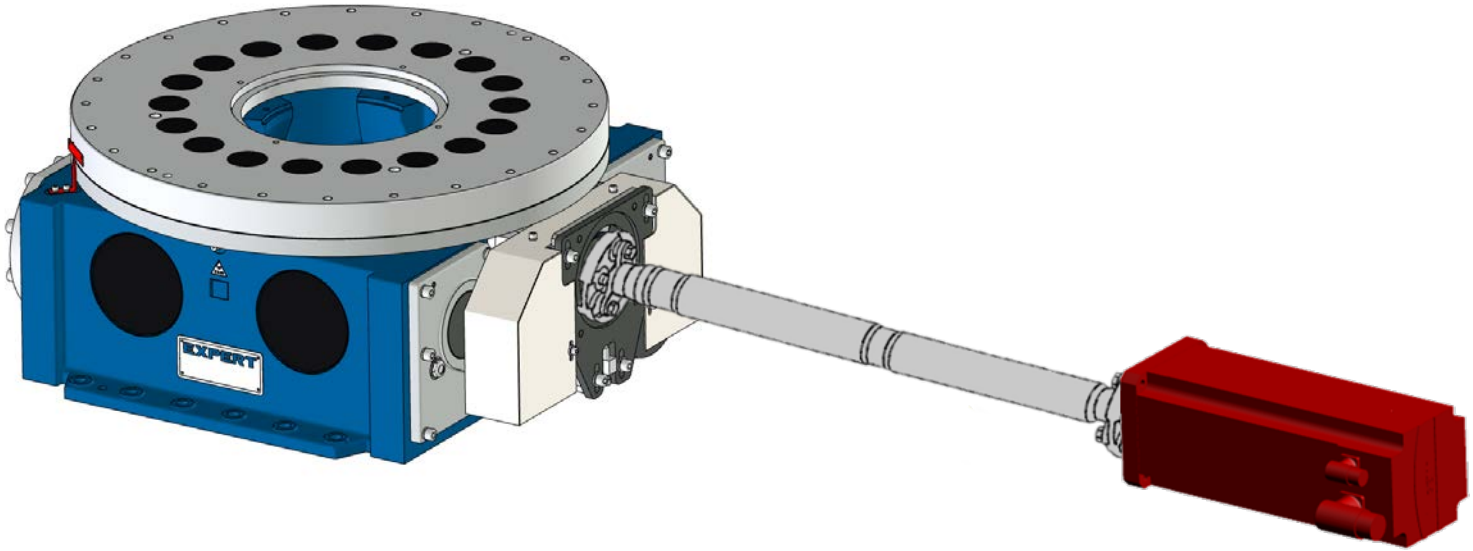

Other motor arrangements

- The new EXPERT-TÜNKERS rotary tables of the EDC series provide for improved flexibility

Teller ergänzen / alle Bilder in gleicher Größe und Anordnung

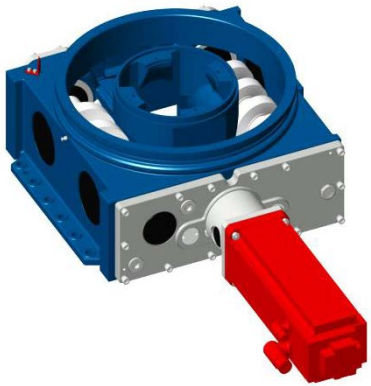

Front mounting
Standard design

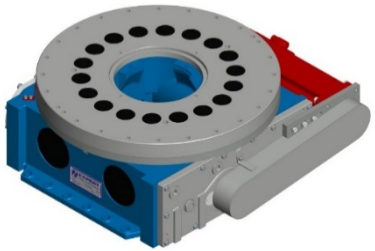

Lateral mounting with spur belt

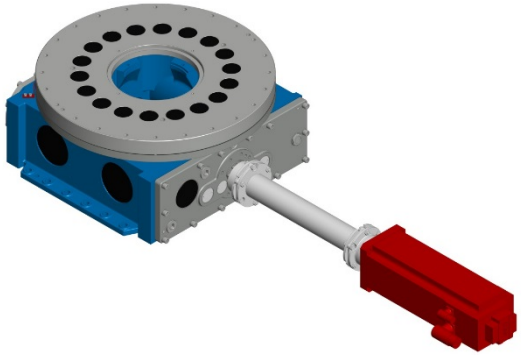

External mounting with spacer shaft

Overview of technical advantages of the EXPERT EDC series

- Variable drive positioning
  - Drive directly at the rotary table
  - Drive at a distance with Kardan shaft
- Integrated reduction gear unit
  - Quick exchange of the drive
  - Easy maintenance
  - Free choice of the drive
- Improved performance
  - Double performance * with the same size
- Cost-efficient
  - Only one drive required
- Proven technology
  - Based on the precise high-performance EXPERT-TÜNKERS rotary table principle

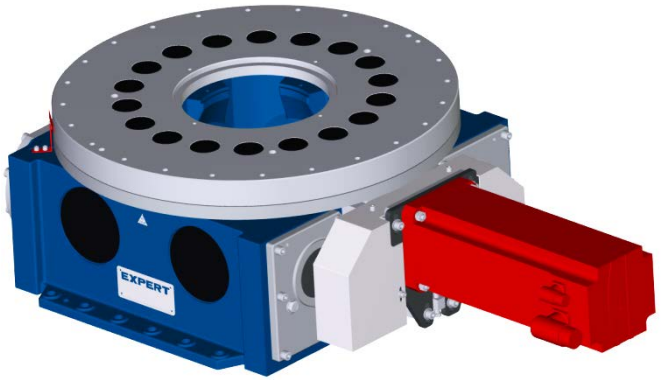

* In direct comparison to the rotary tables of the EXPERT EDH series

Contact

EXPERT-TÜNKERS GmbH
Seehofstraße 56-58
D-64653 Lorsch

Phone +49 (0) 6251-592-0
Fax +49 (0) 6251-592-100

E-Mail sales@expert-tuenkers.de
Internet www.expert-tuenkers.de

YouTube